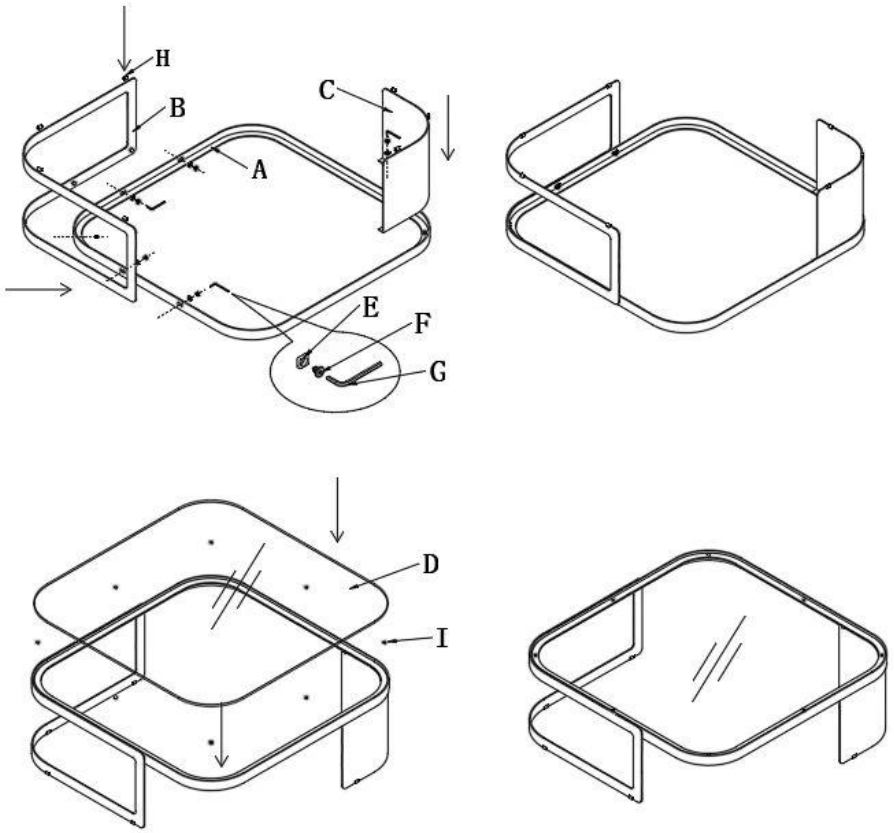

ASSEMBLY INS TRUCTION

PARTS

A		1 PCS
B		1 PCS
C		1 PCS
D		1 PCS
E		8 PCS
F		8 PCS
G		1 PCS
H		7 PCS
I		8 PCS

Model No.:CT8088